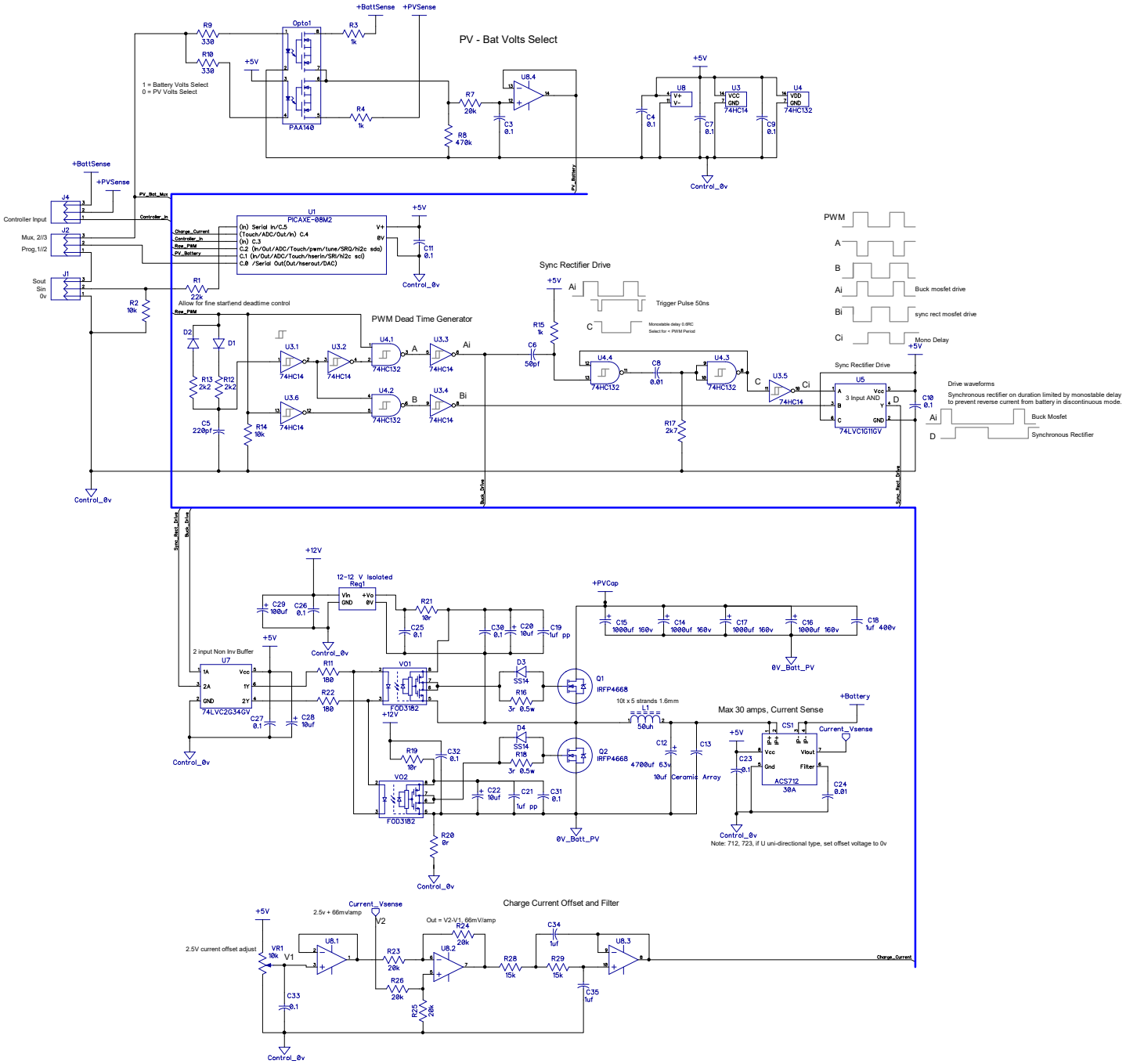
PV - Bat Volts Select
+BattSense
+PVSense
Opto1
PAA140
R9 330
R10 330
R3 1k
R4 1k
+5V
1 = Battery Volts Select
0 = PV Volts Select
R7 20k
R8 470k
C3 0.1
U8.4
PV_Battery
U8
U3
74HC14
U4
74HC132
C4 0.1
C7 0.1
C9 0.1
Control_0v
PV_Bat_Mux
J4
Controller Input
J2
Mux, 2/3
Prog, 1/2
J1
Sout
Sin
0v
U1
PICAXE-08M2
Charge_Current
Controller_In
Bye_PWM
PV_Battery
(In) Serial In/C.5
(Touch/ADC/Out/In) C.4
(In) C.3
C.2 (In/Out/ADC/Touch/pwm/tune/SRQ/hi2c sda)
C.1 (In/Out/ADC/Touch/hserin/SRI/hi2c scl)
C.0 /Serial Out(Out/hserout/DAC)
V+
0V
C11 0.1
R1 22k
Allow for fine start/end deadtime control
R2 10k
PWM Dead Time Generator
D2
D1
R13 2k2
R12 2k2
C5 220pf
U3.1
U3.2
U3.6
R14 10k
U4.1
U4.2
U3.3
U3.4
A
B
Ai
Bi
Sync Rectifier Drive
R15 1k
C6 50pf
Trigger Pulse 50ns
Monostable delay 0.8RC
Select for < PWM Period
U4.4
U4.3
C8 0.01
R17 2k7
U3.5
C
Ci
U5
3 Input AND
74LVC1G11GV
D
C10 0.1
PWM
Buck mosfet drive
sync rect mosfet drive
Mono Delay
Drive waveforms
Synchronous rectifier on duration limited by monostable delay to prevent reverse current from battery in discontinuous mode.
Buck Mosfet
Synchronous Rectifier
Buck_Drive
Sync_Rect_Drive
+12V
12-12 V Isolated
Reg1
Vin
GND
+Vo
0V
C29 100uf
C26 0.1
R21 10r
C25 0.1
C30 0.1
C20 10uf
C19 1uf pp
+PVCap
C15 1000uf 160v
C14 1000uf 160v
C17 1000uf 160v
C16 1000uf 160v
C18 1uf 400v
0V_Batt_PV
2 input Non Inv Buffer
U7
74LVC2G34GV
C27 0.1
C28 10uf
R11 180
R22 180
VO1
FOD3182
D3
SS14
R16 3r 0.5w
Q1
IRFP4668
10t x 5 strands 1.6mm
L1 50uh
Max 30 amps, Current Sense
+Battery
CS1
Current_Vsense
Vcc
Gnd
Vout
Filter
ACS712 30A
C23 0.1
C24 0.01
C12 4700uf 63v
C13 10uf Ceramic Array
D4
R18 3r 0.5w
Q2
IRFP4668
R19 10r
C32 0.1
VO2
C22 10uf
C21 1uf pp
C31 0.1
R20 0r
Note: 712, 723, if U uni-directional type, set offset voltage to 0v
Charge Current Offset and Filter
2.5v + 66mV/amp
V2
Out = V2-V1 66mV/amp
2.5V current offset adjust
VR1 10k
V1
U8.1
U8.2
U8.3
R23 20k
R24 20k
R26 20k
R25 20k
C33 0.1
C34 1uf
R28 15k
R29 15k
C35 1uf